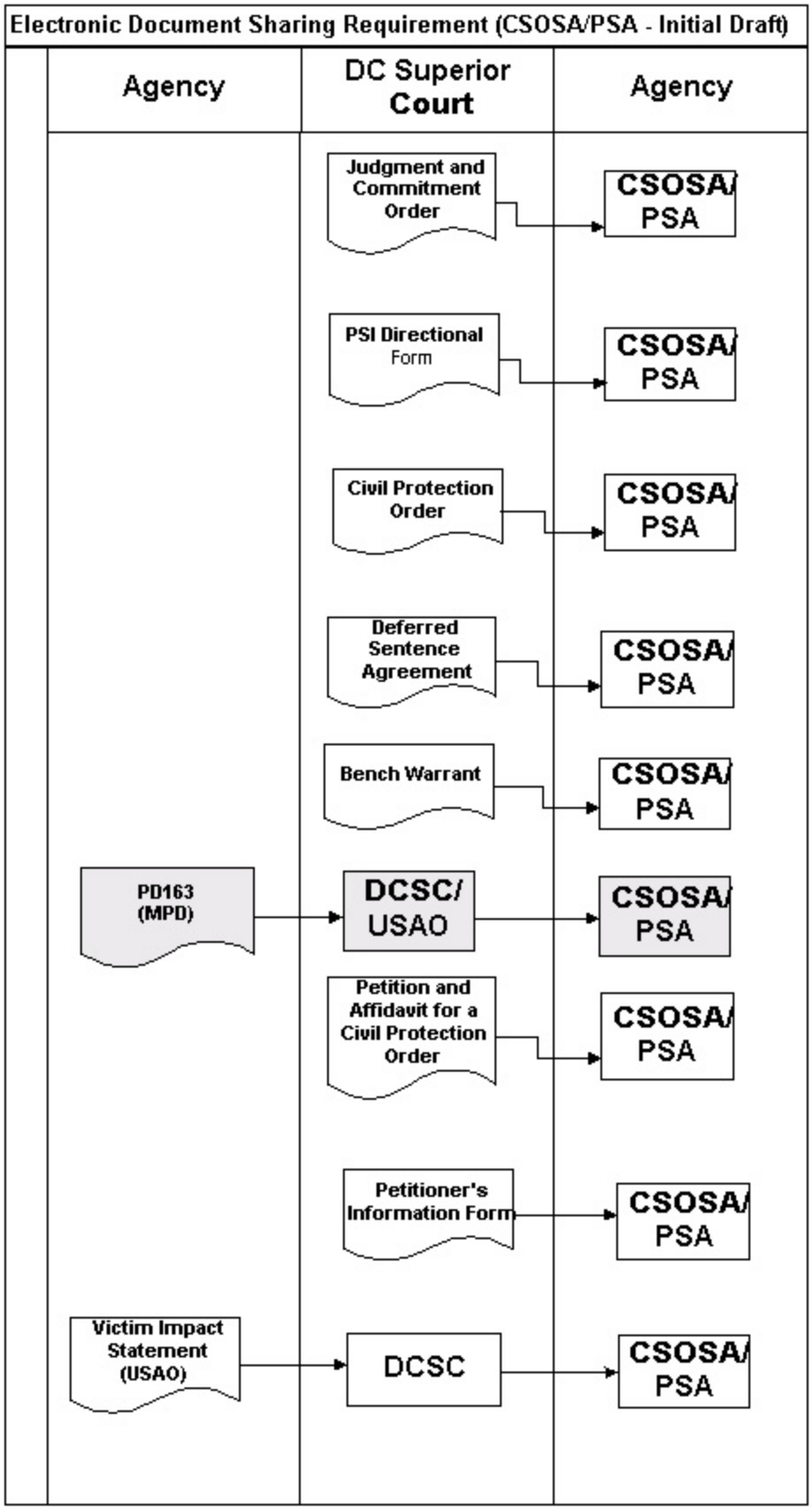
Electronic Document Sharing Requirement (CSOSA/PSA - Initial Draft)
Agency
DC Superior Court
Agency
Judgment and Commitment Order
CSOSA/ PSA
PSI Directional Form
CSOSA/ PSA
Civil Protection Order
CSOSA/ PSA
Deferred Sentence Agreement
CSOSA/ PSA
Bench Warrant
CSOSA/ PSA
PD163 (MPD)
DCSC/ USAO
CSOSA/ PSA
Petition and Affidavit for a Civil Protection Order
CSOSA/ PSA
Petitioner's Information Form
CSOSA/ PSA
Victim Impact Statement (USAO)
DCSC
CSOSA/ PSA

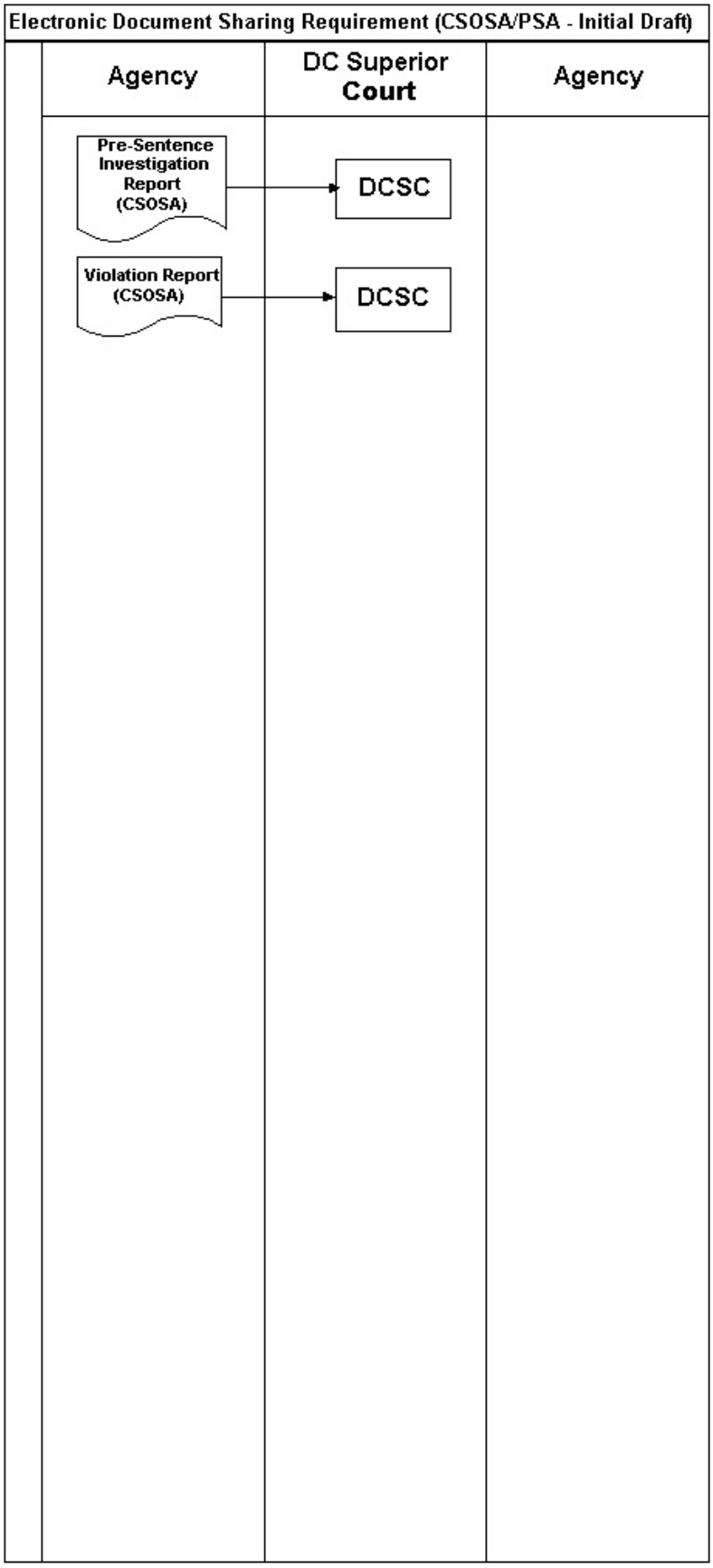
Electronic Document Sharing Requirement (CSOSA/PSA - Initial Draft)
Agency
DC Superior Court
Agency
Pre-Sentence Investigation Report (CSOSA)
DCSC
Violation Report (CSOSA)
DCSC